Pro-Loop™ SPU Disposable Hoist Sling
Instructions for use

REF - MPC

LOCO-089	**Extra Small**
LOCO-090	**Small**
LOCO-091	**Medium**
LOCO-092	**Large**
LOCO-092XL	**Extra Large**

(Please refer to sizing guide on page 4)



Illustration: LOCO-091 Medium

⚠ **All patient moving and handling tasks should be carried out in accordance with approved patient moving and handling techniques and after a full assessment of patient, equipment, task and environment. Always follow the approved policy of your place of work when adopting moving and handling practices**.

Description - ⚠ Compatible with loop fix hoisting systems only

The Select Pro-Loop™ single patient use disposable hoist sling is a general purpose high back disposable sling with head support. The Select Pro-Loop™ incorporates leg section retaining bands enabling the sling to be 'hammocked' should it be required. ***Patented safety harness: GB 2441390***

Instructions for use

Ensure the sling labels are on the outside of the sling.

From a seated position

Safely lean the patient forward and feed the sling in between the back of the chair and the patient so that the base of the body of the sling is positioned at the base of the patient's spine.

Ensure that the sling is centrally positioned.

Take the leg straps round and under each thigh bringing them up and together between the patient's legs. Ensure that there is no creasing or rucking of the sling.

Cross the leg straps by feeding the whole of one set of leg strap loops through the shortest leg loop of its opposite.

Attach the leg straps and shoulder straps to the hoist spreader bar.

⚠ A more upright position for the patient is achieved by connecting the long leg strap loops and the short shoulder loops. The position may be varied by using the different adjustments on the sets of loops. Unless the assessment has specifically identified to the contrary always ensure even and uniform adjustments keeping a symmetry between the left and right sides of the sling.

⚠ Unless the assessment has specifically identified to the contrary, when raising the patient in the hoist ensure that the brakes are off; this reduces any swinging that may occur and allows the hoist to find its own centre of gravity for a safe lift. Also, ensure that the sling is not creased or rucked underneath the patient and that the sling is free from all obstacles.

From a lying position

Roll the patient onto the sling ensuring that the base of the body of the sling is positioned at the base of the patient's spine and that the sling centrally positioned.

Cross the leg straps in the same way as for hoisting a patient from a seated position.

Hammocking the Pro-Loop Sling

If required the Pro-Loop sling may be hammocked by utilising the leg section retaining straps. Pass both leg sections underneath both of the patient's legs, one from each side, while threading the upper leg section through its opposite leg section retaining strap. One leg section will then be directly over its opposite and secured within a leg section retaining strap.

⚠ **For further information and training on moving and handling techniques please contact your Moving and Handling Advisor or similar.**

Care & Use

⚠ **Check sling integrity before each use paying particular attention to stitching – do not use if damaged or soiled.** ***(See inspection diagram below)***

Single patient use (patient specific)

Do not launder

Store away from sunlight and sources of heat

Store in dry conditions

Specifications

⚠ **Hoist spreader bar - maximum spread**

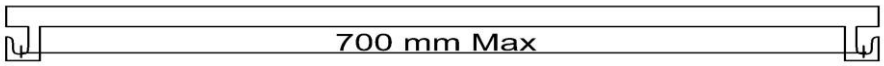

Safe working load (SWL): 230 kg

Materials: Sling body - Non-Woven Polypropylene Webbing – Woven Polypropylene

Latex free

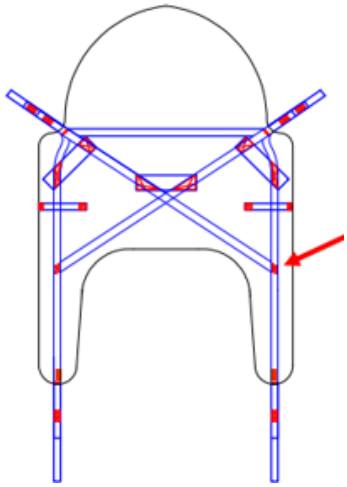

Inspections to be carried out before each use of the sling.

- Prior to each use check the sling for signs of damage.
- Check all sewing at all the positions indicated in red (example arrowed). Ensure that the sewing is present and not damaged on either side of the sling.
- Do not used if damaged

  Do not use if either of these symbols is visible. If visible it indicates that the sling has been washed.
- Inspect the hoist to be used according to the manufacturer's instructions.

Shelf Life (Unopened Product)

SPU Disposable Patient Hoist Slings have a **10-year shelf life from the date of manufacture**, provided the product remains:

- Unopened
- Stored in its original packaging
- Kept in clean, dry conditions
- Protected from sunlight, UV light, moisture, and temperature extremes

The date of manufacture is identified on the product labelling.

Warranty

SPU Disposable Patient Hoist Slings carry a:

2-year warranty from the date of purchase, covering defects in materials and workmanship under normal intended use and in accordance with the Instructions for Use (IFU).

The warranty does not cover:

- Damage caused by misuse or unauthorised modification
- Normal wear and tear
- Damage resulting from failure to follow inspection, care and storage guidance

---

Service Life & Inspection Requirements

The service life of SPU Disposable Patient Hoist Slings is dependent upon:

- Frequency of use
- User weight and load conditions
- Environmental exposure

- Handling and storage conditions

In accordance with LOLER requirements and safe practice guidance:

- Slings must be subject to regular pre-use inspection.
- A thorough examination must be carried out in line with local policy and statutory requirements.
- The sling must be removed from service immediately if it is:
    - Soiled in a manner that cannot be appropriately decontaminated
    - Damaged in any way
    - Showing signs of wear, fraying, stitching failure, fabric degradation, label illegibility, and any distortion to loop or clip (where applicable).

Maximum Permitted Duration of Use

- Irrespective of apparent condition, washable patient hoist slings must be:
    - **Permanently withdrawn from service and discarded after a maximum of six (6) months from first use.**
    - This defined maximum use period forms part of the manufacturer's risk control measures and supersedes visual condition assessment.

End-of-Life Disposal

- Disposal must be carried out in accordance with local infection prevention and clinical waste management procedures.

♻ Recyclable where facilities exist.

Applied regulations and standards

MD Class 1 Medical Device UK MDR 2002 EU MDR 2017/745 BS EN 12182: 2012 Tech Aids for disabled persons BS EN ISO 21856:2022 Assistive products - General requirements and test methods BS EN ISO 10535:2021 Hoists for the transfer of disabled persons. Requirements and test methods.	CE UKCA

For further assistance please contact your supplier or customer services at address below.

Manufacturer

Select Health Care (UK) Ltd
Unit 2 Albert Road
Rushden
Northants
NN10 0BU

Tel: +44 (0) 1933 411729
Fax; +44 (0) 1933 410213
Email: info@selecthealthcare.co.uk
Website: www.selecthealthcare.co.uk

European Representative

EC REP **Select Healthcare (EU),** 72 Liffock Park, Coleraine, Northern Ireland, BT51 4DG

Glossary of symbols and terms used in product and packaging labels that are not expressed above.

Symbol	Meaning	Associated Terms
	Consult instructions	
DI	Device Identifier – (GS1 UK GTIN 13 used)	AI (01) – Application identifier 01
SN	Serial Number	AI (21) – Application identifier 21
LOT	Lot / Batch Number	AI (10) – Application Identifier 10
	Date of manufacture	AI (11) – Application Identifier 11
UDI	Unique Device Identifier - collective term for DI, SN, LOT & date of manufacture (all contained within machine readable GS1 DataMatrix)	GS1 DataMatrix = 2D Matrix symbols that can carry all GS1 keys and attributes

---

Sizing Guide for Select Health Care (UK) Ltd Hoist Slings

⚠ **All patient moving and handling tasks should be carried out in accordance with approved patient moving and handling techniques and after a full assessment of patient, equipment, task and environment.**
Always follow the approved policy of your place of work when adopting moving and handling practices.

⚠ The following information is intended as guide only and is an approximation.
Other factors such as physical disabilities, weight distribution and the patient's shape should also be part of the assessment.

Sizing Guide - Use a soft tape measure to record these two measurements:

1. Top of head to sacrum.

2. Distance across the shoulders.

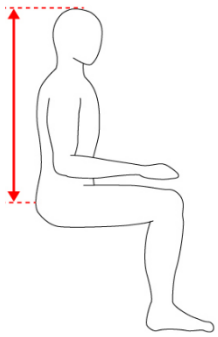

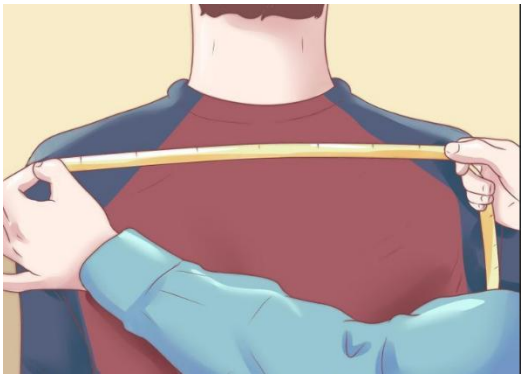

Apply the two recorded measurements to the sizes and measurements shown in the table below.

	Sling Size				
	Extra Small	**Small**	**Medium**	**Large**	**Extra Large**
Colour code					
Weight Range	16-45 kg	34-68 kg	57-91 kg	80 – 136 kg	125-200kg
Measurement:					
Top of head to sacrum	68 – 87cm	74 – 92cm	80 – 104cm	91 - 110cm	96 – 116cm
Shoulder width	31 – 39cm	34 – 43cm	40 – 51cm	47 – 60 cm	55 – 65cm

⚠ Weights shown here are for sizing purposes only and are not the safe working load (SWL) of the sling.
The SWL of a given sling is shown in Specifications section of the IFU and also printed on each sling.
⚠ As part of the assessment we recommend that once a sling size and type has been selected, to then try it with the patient using at least one extra member of staff to monitor and assist. Raise the patient no more than a few centimetres to ascertain safety, comfort and suitability before proceeding.
⚠ For amputees; with regard to the weight range of a given sling, the weight of the patient would need to be extrapolated according to the nature of the amputation.